BD SERIES

Full Extension Ball Bearing Drawer Slide with Bayonets (for Office Cabinets)

Specification

Function Regular

Extension Full Extension

Available Sizes 450 mm - 550 mm

Load Capacity Up to 45 kg

Slide Width 45 mm

Assembly Height 12.7 mm ± 0.2

Thickness 1.2 x 1.2 x 1.4 mm

Release Separable: Equipped with a release lever allowing for easy removal and return of drawer.

Finish Galvanized or Black

Packaging 15 Sets per Carton

Technical Design

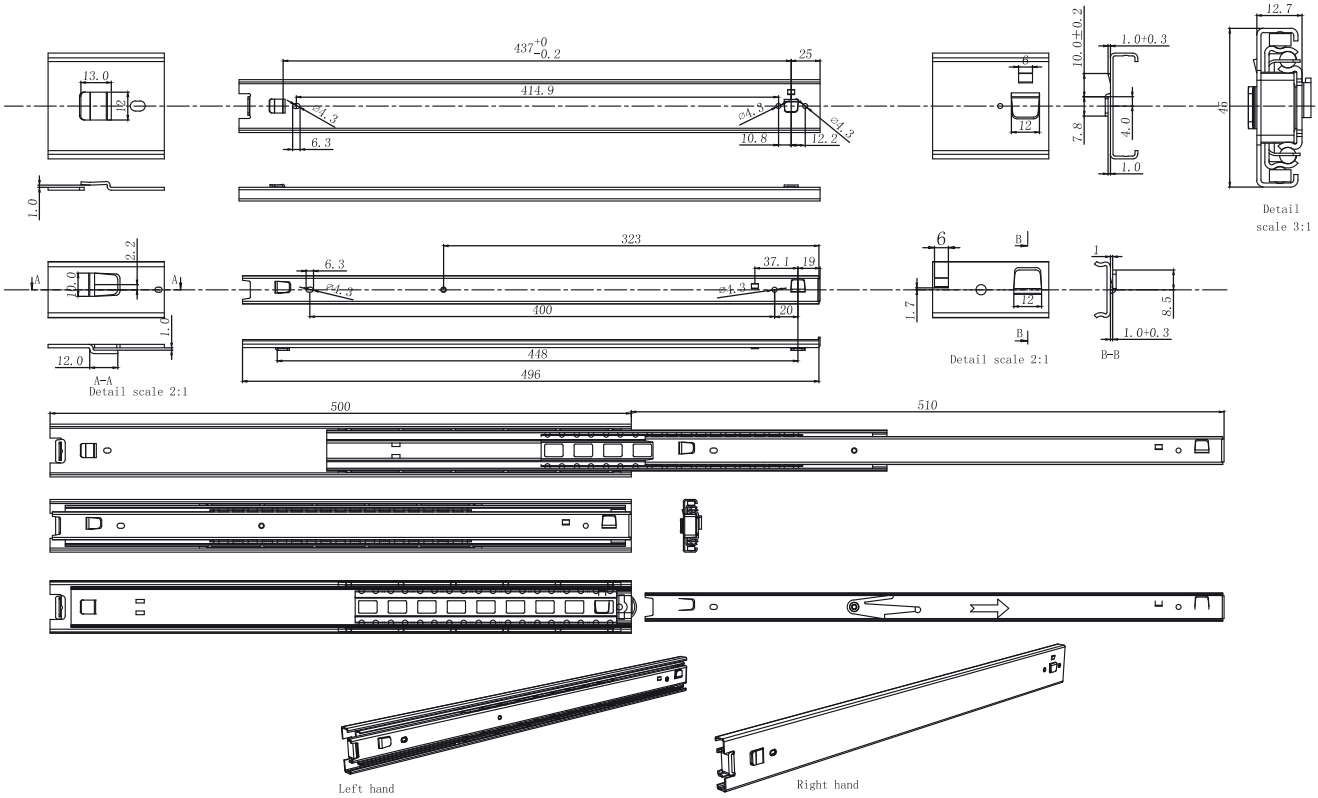

Measurement Table

Item No	A (mm)	B (mm)	C (mm)	D (mm)	E (mm)	F (mm)
BDF0450R	450	460	412	390	423	375
BDF0500R	500	510	437	415	448	400
BDF0550R	550	560	462	440	473	425